BUILT STRONG - BUILT TOUGH

STAINLESS STEEL EQUIPMENT

WWW.ACE-UK.COM

HEAVY DUTY
INDUSTRIAL
COMMERCIAL
MEDICAL
VETERINARY
RETAIL
WHOLESALE

SSWB - wall bench - 16 gauge 304 stainless steel

ACE STAINLESS STEEL TABLES

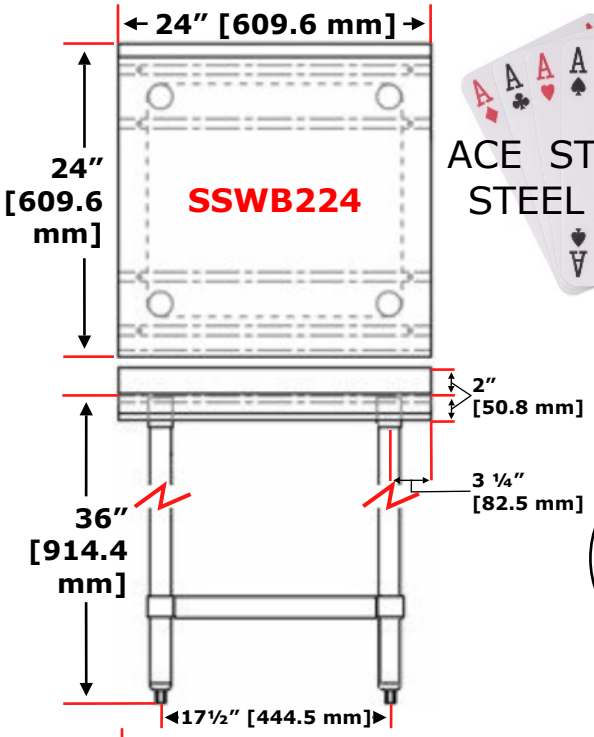

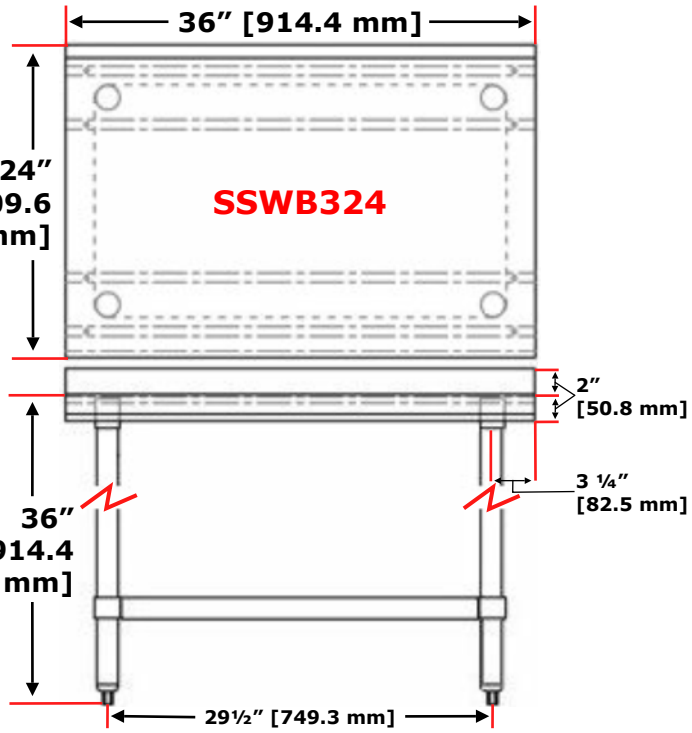

Adjustable Shelf Height

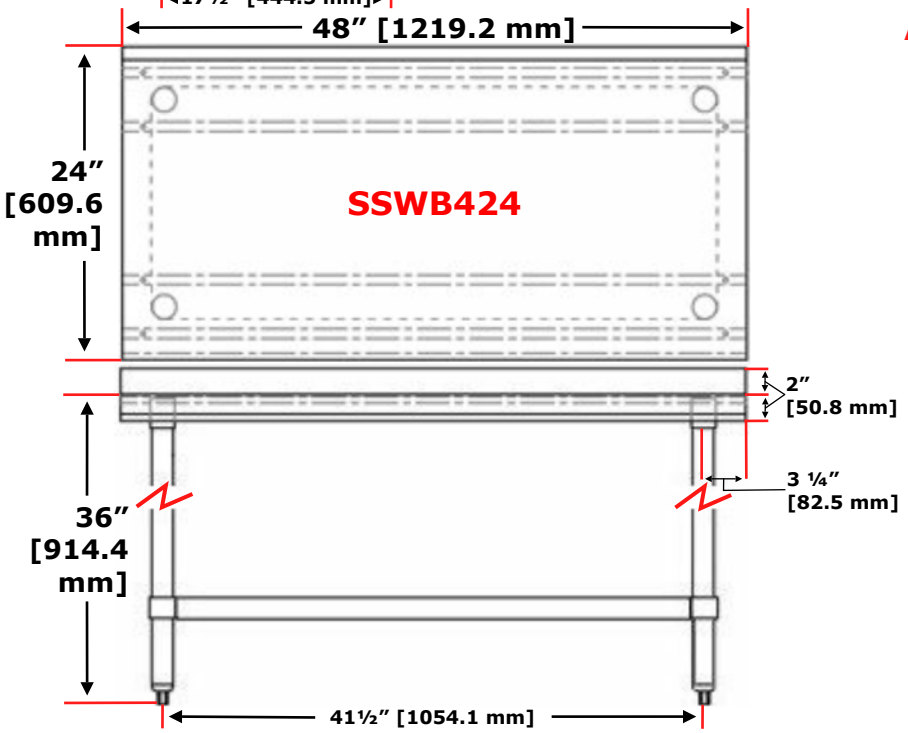

All Tables will accept Extra Shelf

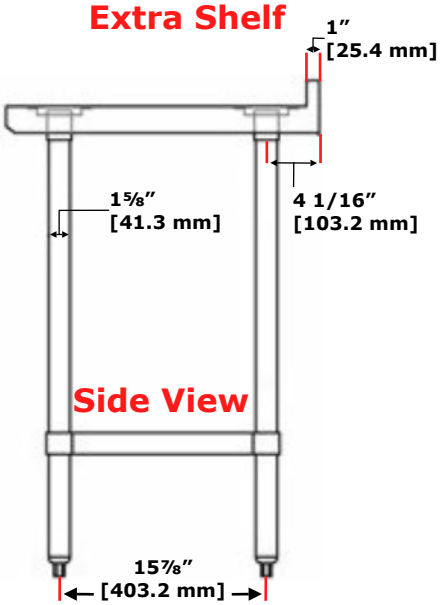

AMERICAN CATERING EQUIPMENT

AMERICAN CATERING EQUIPMENT (UK) LIMITED
5 CHANTRY COURT
SOVEREIGN WAY
CHESTER WEST
CHESTER CH1 4QN
UNITED KINGDOM

TELEPHONE: 44 (0) 1244 381281
FAX: 44 (0) 1244 381700
OFFICE: FSE@ACE-UK.COM
PARTS: PARTS@ACE-UK.COM
WEBSITE: WWW.ACE-UK.COM

BUILT STRONG - BUILT TOUGH

STAINLESS STEEL EQUIPMENT

WWW.ACE-UK.COM

HEAVY DUTY
INDUSTRIAL
COMMERCIAL
MEDICAL
VETERINARY
RETAIL
WHOLESALE

SSWB - wall bench - 16 gauge 304 stainless steel

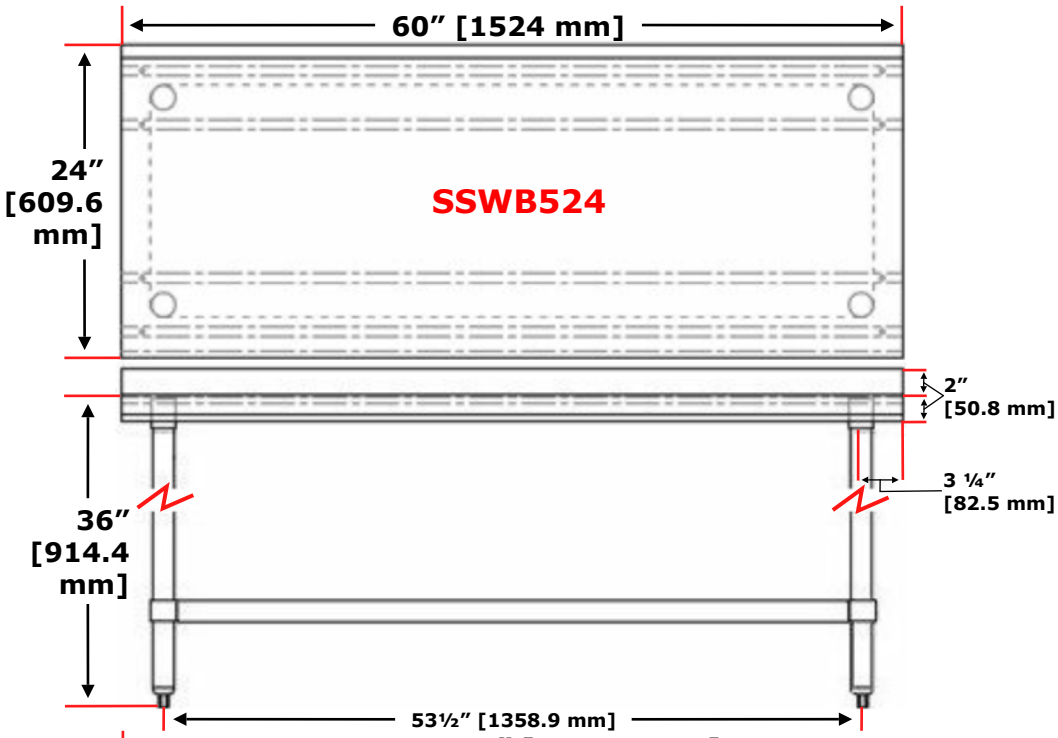

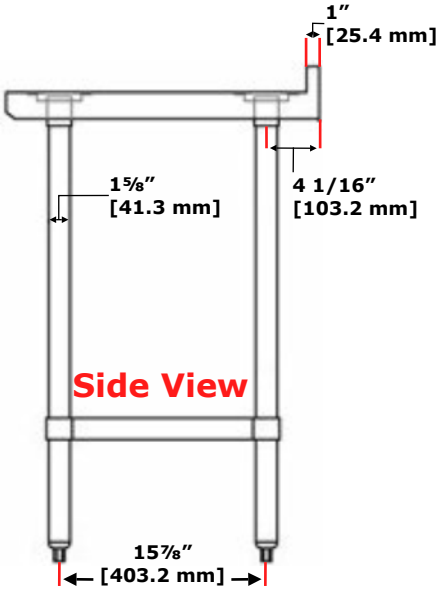

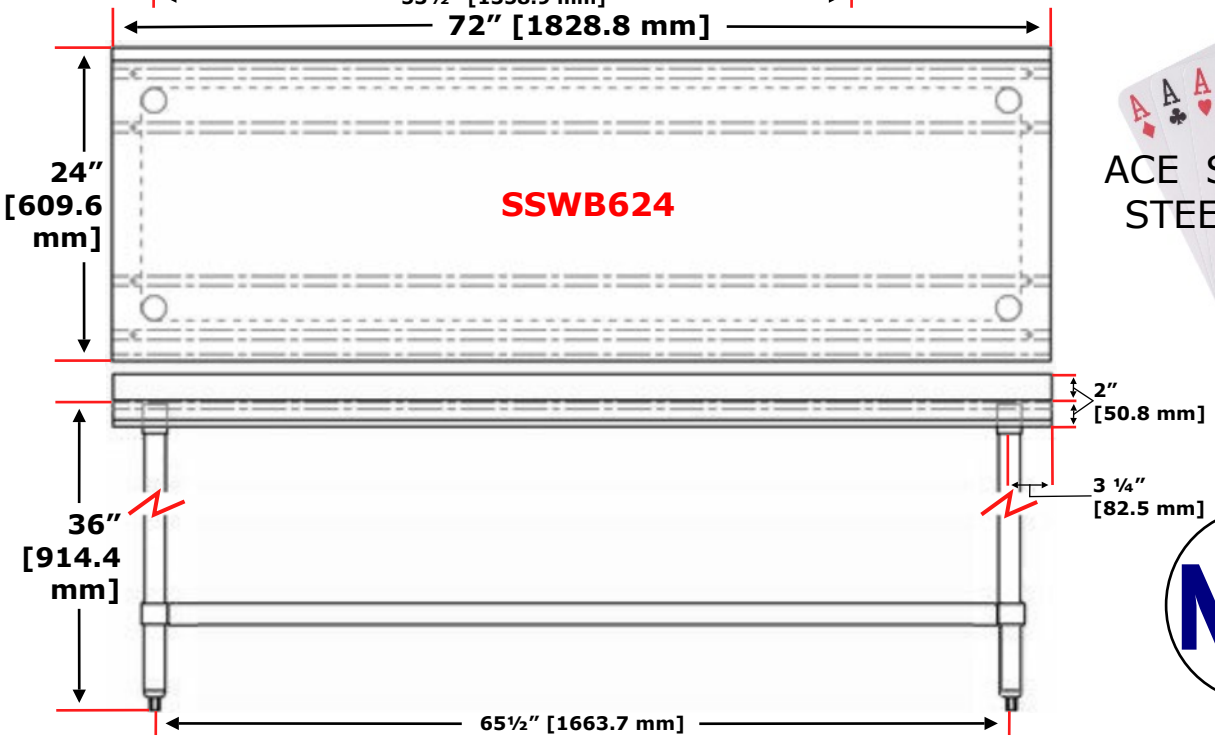

ACE STAINLESS STEEL TABLES

NSF

AMERICAN CATERING EQUIPMENT

AMERICAN CATERING EQUIPMENT (UK) LIMITED
5 CHANTRY COURT
SOVEREIGN WAY
CHESTER WEST
CHESTER CH1 4QN
UNITED KINGDOM

TELEPHONE: 44 (0) 1244 381281
FAX: 44 (0) 1244 381700
OFFICE: FSE@ACE-UK.COM
PARTS: PARTS@ACE-UK.COM
WEBSITE: WWW.ACE-UK.COM

NSF